4-Zone RGBW WiFi Touch Panel
USER MANUAL

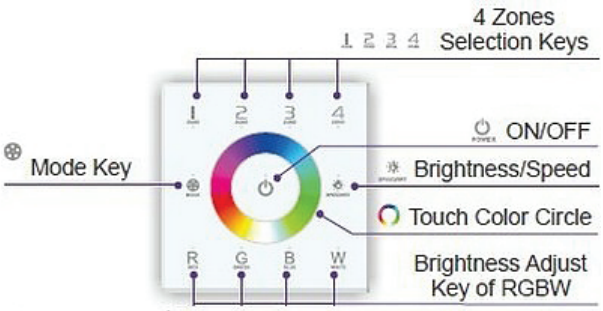

* Long press ⏻ to turn on/off the buzzer.

Tables of Changing Mode:		
1. Static Red	5. Static Purple	9. 7 Colors Skipping
2. Static Green	6. Static Cyan	10. RGB Color Smooth
3. Static Blue	7. Static White	11. Full-color Smooth
4. Static Yellow	8. RGB Skipping	

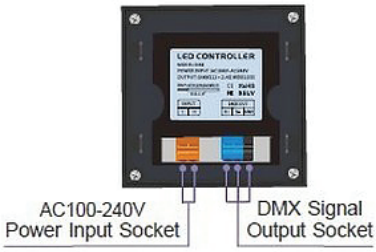

WIRING MASTER & DECODERS

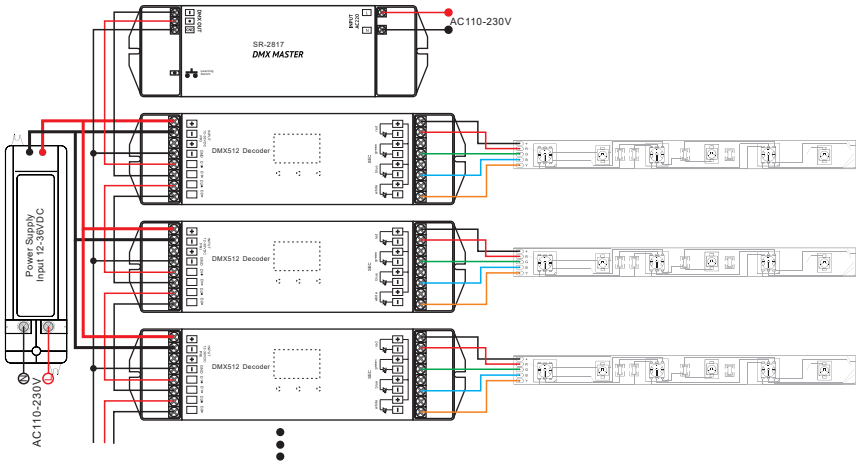

PAIRING & ZONE SETTING

iOS / Android

Touch Panel

After you have wired the master and decoders, complete the following steps:

1.) **Pairing** WiFi Touch Panel -or- iOS/Android Device:

a.) Press the learning button on the master, the LED signal light will turn on.
b.) Turn on the touch panel or iOS/Android app, touch the zone number and color wheel.
c.) Once the master signal light flashes, signify that your master is paired with device.
d.) Delete ID: Press the learning button 10s until the light off.

2.) **Zone Setting** by DMX Addresses:

DMX decoders' address 001 for zone 1
DMX decoders' address 005 for zone 2
DMX decoders' address 009 for zone 3
DMX decoders' address 013 for zone 4

Each zone can pair endless of DMX decoders if you set the address accordingly.